KOBE Brand Range Hood

Model No. IN2630SQB-700-1

PREMIUM SERIES IN26 SERIES

INSTALLATION INSTRUCTIONS
AND OPERATION MANUAL

IMPORTANT
READ THIS FIRST

READ BEFORE INSTALLATION

1. Carefully check all contents of packages.

2. Thoroughly inspect the unit for any shipping damages, cosmetic damages or defects.

3. Have a certified contractor/electrician test the unit before installation.

IF THERE IS ANY PROBLEM:

1. **DO NOT INSTALL THE UNIT AND KEEP ALL ORIGINAL PACKAGING MATERIAL.**

2. Have your original invoice as proof of purchase and product serial number ready.

3. Contact your merchant for product replacement due to shipping damages, cosmetic damages or defects.

4. For all other issues, call 1-877-BUY-KOBE (289-5623), or e-mail to info@koberangehoods.com .

NO RETURN, NO REFUND, NO EXCHANGE IF:

1. **PRODUCT HAS BEEN INSTALLED**
2. **KNOCK-OUT HOLES HAVE BEEN PUNCTURED**
3. **MISSING ORIGINAL PACKAGING MATERIAL AND/OR PARTS**

[ENGLISH]

- READ AND SAVE THESE INSTRUCTIONS -

CONTENTS

IMPORTANT SAFETY INSTRUCTIONS..... 1
COMPONENTS OF PACKAGE 3
INSTALLATION 4
OPERATING INSTRUCTIONS 9
MAINTENANCE.....12
SPECIFICATIONS 13
MEASUREMENTS & DIAGRAMS.....14
PARTS LIST 15
CIRCUIT DIAGRAM.....17
TROUBLE SHOOTING 18
WARRANTY 19
WARRANTY INFORMATION FORM 21

- READ ALL INSTRUCTIONS CAREFULLY BEFORE STARTING -

ALL WIRING MUST BE DONE BY A PROFESSIONAL AND IN ACCORDANCE WITH NATIONAL AND LOCAL ELECTRICAL CODES

INTERTEK
C LISTED US
3099247

IMPORTANT SAFETY INSTRUCTIONS

- PLEASE READ THIS SECTION CAREFULLY BEFORE PROCCEDING WITH INSTALLATION -

⚠WARNING: **TO REDUCE THE RISK OF FIRE, ELECTRIC SHOCK OR PERSONAL INJURY, OBSERVE THE FOLLOWING:**

1) Installation and electrical wiring must be done by qualified professionals and in accordance with all applicable codes and standards, including fire-rated construction.
2) When cutting or drilling into wall or ceiling, be careful not to damage electrical wiring or other hidden utilities.
3) Ducted fans must be vented to the outside.
   a) Before servicing or cleaning unit, open the light panel and SWITCH POWER OFF AT SERVICE PANEL.
   b) Clean all grease laden surfaces frequently. To reduce the risk of fire and disperse air properly, make sure to vent air outside. DO NOT vent exhaust air into wall spaces, attics, crawl spaces or garages.

NOTE - This warranty is void without an authorized agent's receipt or if unit is damaged due to misuse, poor installation, improper use, mistreatment, negligence or any other circumstances beyond the control of KOBE RANGE HOODS authorized agents. Any repair carried out without the supervision of KOBE RANGE HOODS authorized agents will automatically void the warranty.

- KOBE RANGE HOODS will not be held responsible for any damages to personal property or real estate or any bodily injuries whether caused directly or indirectly by the range hood.

⚠WARNING: **TO REDUCE THE RISK OF PERSONAL INJURY IN THE EVENT OF A RANGE TOP GREASE FIRE:**

1. Keep all fan, baffle/spacer/filter/oil tunnel/oil container and grease-laden surfaces clean. Grease should not be allowed to accumulate on fan, baffle/spacer/filter/oil tunnel/oil container.
2. Always turn hood ON when cooking.
3. Use high settings on cooking range ONLY when necessary.
4. Do not leave cooking range unattended when cooking.
5. Always use cookware and utensils appropriate for the type and amount of food prepared.
6. Use this unit only in the manner intended by the manufacturer.
7. Before servicing, switch power off at service panel and lock service panel (if possible) to prevent power from switching on accidentally.
8. Clean ventilating fan frequently.

What to Do In The Event Of a Range Top Grease Fire

- SMOTHER FLAMES with a tight fitting lid, cookie sheet, or metal tray, and then turn off the burner. KEEP FLAMMABLE OR COMBUSTIBLE MATERIAL AWAY FROM FLAMES. If the flames do not go out immediately, EVACUATE THE AREA AND CALL THE FIRE DEPARTMENT or 911.
- NEVER PICK UP A BURNING PAN – You May Get Burned.
- DO NOT USE WATER, including wet dishcloths or towels – a steam blast will result.
- Use an extinguisher ONLY if:
  a) You have a Class A, B, C extinguisher and know how to operate it.
  b) The fire is small and contained in the area where it started.
  c) The fire department has been called.
  d) You can fight the fire with your back to an exit.

What to Do If You Smell Gas

1. Extinguish any open flame.
2. Do not try to turn on the lights or any type of appliance.
3. Open all doors and windows to disperse the gas. If you still smell gas, call the Gas Company and Fire Department right away.

⚠CAUTION

1. For general ventilation use only. Do not use to exhaust hazardous or explosive materials and vapors.
2. To reduce the risk of fire, use metal ductwork only. Sufficient air is needed for proper combustion and exhaustion of gases through the flue (chimney) to prevent back drafting.
3. Follow the heating equipment manufacturer's guideline and safety standards such as those published by the National Fire Protection Association (NFPA), and the American Society for Heating, Refrigeration and Air Conditioning Engineers (ASHRAE), and code authorities.
4. Activating any switch may cause ignition or an explosion.
5. Due to the size and weight of this hood, installation by 2 persons is recommended.

⚠ WARNING

ELECTRICAL SHOCK HAZARD – Can result in serious injury or death. Disconnect appliance from electric power before servicing. If equipped, the fluorescent light bulb contains small amounts of mercury, which must be recycled or disposed of according to Local, State, and Federal Codes.

COMPONENTS OF PACKAGE

(Must keep all material for returns or refunds)

Range Hood Box

{A} KOBE Range Hood –1
{B} Warranty Registration Card – 1
{C} Quick Ref Guide – 1
{D} Baffle Filters – 2 (for 30” hood)
{E} Oil Tunnel – 1
{F} Spacer – 2 (for 30” hood)
{G} Baffle Handle Package – 1

{H} Remote Control – 1
{I} Rectangular Exhaust Plate – 1
{J} Rectangular Exhaust Adapter – 1
{K} Power cord – 1
{L} 6” round Plastic Exhaust – 1
{M} Twist-on wire connector – 3
{N} Screws – 2

{A}

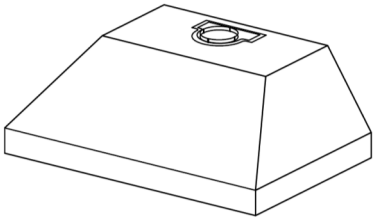

{B}

{C}

QUICK REFERENCE GUIDE

IMPORTANT
READ THIS FIRST

READ BEFORE INSTALLATION:
1. Carefully check all contents of packages.
2. Thoroughly inspect the unit for any shipping damages, cosmetic damages or defects.
3. Have a certified contractor/electrician test the unit before installation.

IF THERE IS ANY PROBLEM:
1. DO NOT INSTALL THE UNIT AND KEEP ALL ORIGINAL PACKAGING MATERIAL.
2. Have your original invoice as proof of purchase and product serial number ready.
3. Contact your merchant for product replacement due to shipping damages, cosmetic damages or defects.
4. For all other issues, call 1-877-BUY-KOBE (289-5623), or e-mail to info@koberangehoods.com

NO RETURN, NO REFUND, NO EXCHANGE IF:
1. PRODUCT HAS BEEN INSTALLED
2. KNOCK-OUT HOLES HAVE BEEN PUNCTURED
3. MISSING ORIGINAL PACKAGING MATERIAL AND/OR PARTS

{D}

{E}

{F}

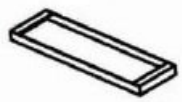

{G}

{H}

{I}

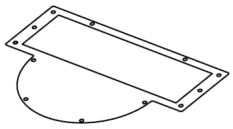

{J}

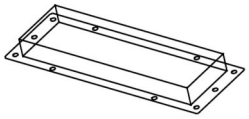

{K}

{L}

{M}

{N}

4 x 6mm (2PCS)

- FOR MORE INFORMATION, PLEASE VISIT OUR WEBSITE **www.koberangehoods.com** OR CONTACT KOBE RANGE HOODS AT (626) 775-8880.

INSTALLATION

PLEASE READ ENTIRE INSTRUCTIONS BEFORE PROCEEDING

Calculation Before Installation

To calculate installation, please refer to TABLE 1. (All calculation in inches.)

- FOR UNDER THE CABINET -

TABLE 1

A = Height of Floor to Ceiling
B = Height of Floor to Counter Top (Standard: 36")
C = Height of Counter Top to Wood Frame Bottom (Minimum 26" to 30")
D = Height of Wood Frame

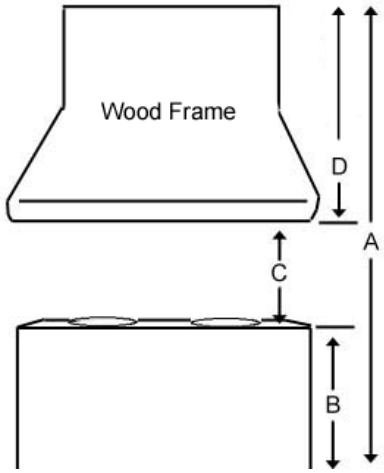

⚠SAFETY WARNING

HOOD MAY HAVE VERY SHARP EDGES; PLEASE WEAR PROTECTIVE GLOVES IF REMOVING ANY PARTS FOR INSTALLING, CLEANING OR SERVICING.

NOTE: BE CAREFUL WHEN USING ELECTRICAL SCREWDRIVER, DAMAGE TO THE HOOD MAY OCCUR.

Preparation Before Installation

NOTE: TO AVOID DAMAGE TO YOUR HOOD, PREVENT DEBRIS FROM ENTERING THE VENT OPENING.

- Decide the location of the venting pipe from the hood to the outside. Refer to Figure 1.
- A straight, short vent run will allow the hood to perform more efficiently.
- Try to avoid as many transitions, elbows, and long run as possible. This may reduce the performance of the hood.
- Temporarily wire the hood to test for proper operation before installing.
- **Important: Peel protective film off the hood, if any.**
- Use duct tape to seal joints between pipe sections.

CAUTION: If moving the cooking range is necessary to install the hood, turn off the power in an electric range at the main electrical box. SHUT OFF THE GAS BEFORE MOVING A GAS RANGE. And use a protective covering to protect cooktop and/or countertop from damage.

Figure 1

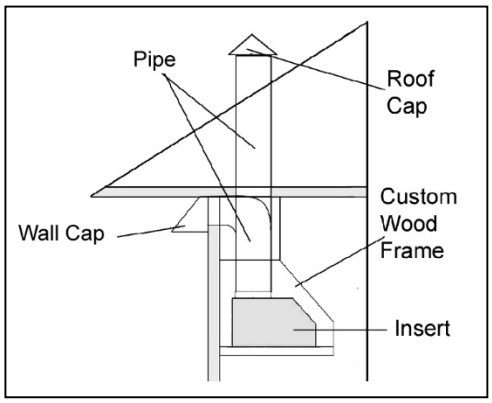

Custom Hood Preparing

1. The custom hood frame must be designed according to the shape and the weight of the hood. Refer to Measurements and Diagram on Page 14.
2. A sturdy base (3/4 inch thick plywood recommended) is needed to sustain the weight of hood.
3. It is recommended to install front & rear stud support (not included). Refer to Figure 2. For safety purposes, extra installation holes on the side of the hood are provided. Prepare the side stud support if needed.
4. Determine and mark the centerlines on the base of the wood frame where the hood will be installed.
5. Location the proper location for the Power Supply Cable. Make a wiring access hole using a drill bit. Install the wire cable and seal the gap around hole.
6. Cut out the opening where the hood will be installed. (Figure 3)

Figure 2

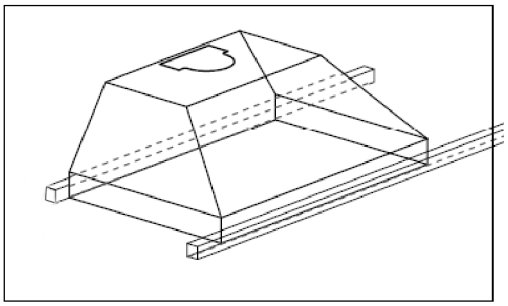

Figure 3

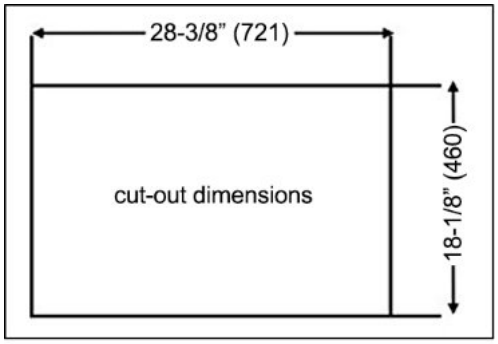

Hood Preparing Before Installation

CAUTION: If moving the cooking range is necessary to install the hood, turn off the power in an electric range at the main electrical box. SHUT OFF THE GAS BEFORE MOVING A GAS RANGE.

7. Choose the required vent option. The Round Exhaust Plate is pre-installed for top vent.
8. For Top 3-1/4" x 10" rectangular installation only:
   - Remove the pre-installed Round Exhaust Plate (Refer to Figure 5). Keep screws to attach Rectangular Exhaust Plate and Rectangular Exhaust Adapter.
   - Place Rectangular Exhaust Plate over vent and secure with 2 screws (Refer to Figure 6). Place Rectangular Exhaust Adapter over the Rectangular Exhaust plate and secure with 10 screws (Refer to Figure 6).
   - Use remaining screws to secure exhaust plate.

Figure 4

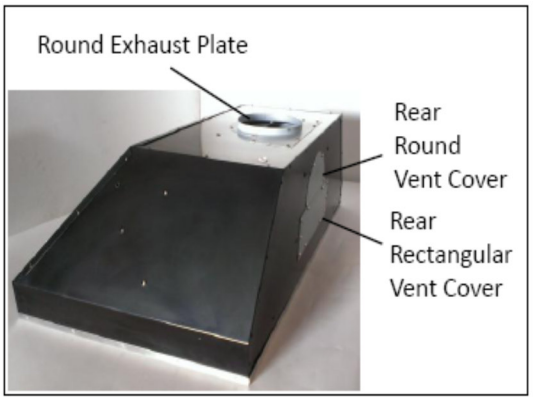

For Rear Vent Options only:
NOTE: The blower is pre-installed for top vent. If installing as rear vent, follow the steps below:

9. For Rear 6” round installation only:
   - Remove the Rear Round Vent Cover and Rear Rectangular Vent Cover (Refer to Figure 4). Keep screws to attach Round Exhaust Plate to rear vent.
   - Remove the pre-installed Round Exhaust Plate from top vent (Refer to Figure 5). Attach it to the rear vent (Refer to Figure 7) using the screws removed from vent covers.
   - Use the Round and Rectangular vent covers removed from rear vent to seal top vent.
   - Remove the 4 screws that secure the blower system (Refer to Figure 8). Hold the blower to keep it from dropping as you remove screws. Keep screws to reattached blower. Slowly rotate blower system to align with mounting holes at the back of the hood. Secure blower using 4 screws (Refer to Figure 9).
10. For Rear 3-1/4” x 10” rectangular installation only:
   - Remove the Rear Round Vent cover and Rear Rectangular Vent Cover (Refer to Figure 5). Keep screws to attach Rectangular Exhaust Plate and Rectangular Exhaust Adapter.
   - Place the Rectangular Exhaust Plate over vent and secure with 2 screws (Refer to Figure 10). Place Rectangular Exhaust Adapter over the Rectangular Exhaust Plate and secure with 10 screws (Refer to Figure 10).
   - Use remaining screws to secure exhaust plate.
   - Remove the pre-installed Round Exhaust Plate from top vent and keep screws (Refer to Figure 4). Use the Round and Rectangular vent covers removed from rear to seal top vent.
   - Remove the 4 screws that secure the blower system (Refer to Figure 8). Hold the blower to keep it from dropping as you remove screws. Keep screws to reattach blower. Slowly rotate blower system to align with mounting holes at the back of the hood. Secure the blower using 4 screws (Refer to Figure 9).

Duct Work Installation

11. Determine and make all necessary cuts in the wall or ceiling for the ductwork. Note: Install the ductwork before installing the hood
12. Use steel pipe to connect the exhaust on the hood to the ductwork above. Use duct tape to make all joints secure and air tight.
13. Please refer to local building codes for the usage of a damper (not included).

Figure 5

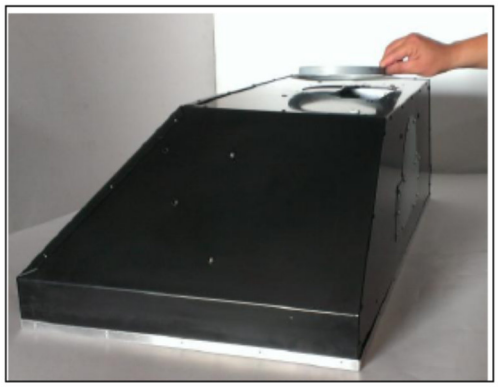

Figure 6

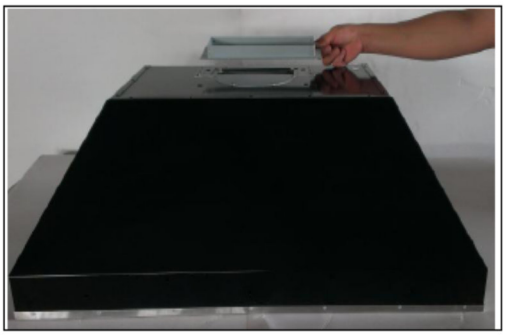

Figure 7

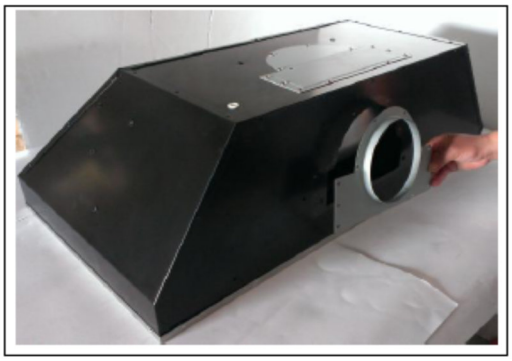

Figure 8

Wiring to Power Supply

⚠ SAFETY WARNING

RISK OF ELECTRICAL SHOCK. THIS RANGE HOOD MUST BE PROPERLY GROUNDED. MAKE SURE THIS IS DONE BY QUALIFIED ELECTRICIAN IN ACCORDANCE WITH ALL APPLICABLE NATIONAL AND LOCAL ELECTRICAL CODES. BEFORE CONNECTING WIRES, SWITCH POWER OFF AT SERVICE PANEL AND LOCK SERVICE PANEL TO PREVENT POWER FROM BEING SWITCHED ON ACCIDENTALLY.

14. Connect electrical wires.
15. Connect three wires (black, white, and green) to house wires and cap with wire connectors. Connect wires corresponding to their colors (i.e. black to black, white to white, and green to green).
16. Store wires in a wiring box.

Figure 9

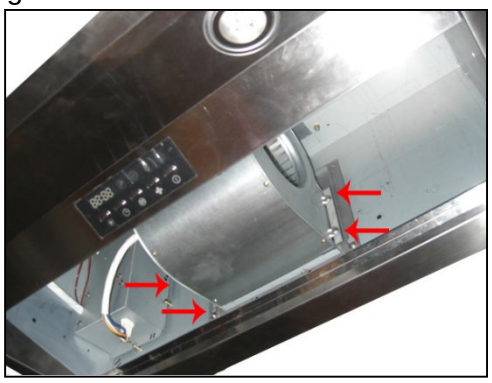

Hood Installation

NOTE: USE HAND TOOLS ONLY. DO NOT OVER TIGHTEN SCREWSM MAY CAUSE DAMAGE TO THE HOOD.

17. Remove the light panel by removing 10 screws located at the bottom of the hood (Refer to Figure 11). Carefully remove the light support panel.
18. Position the hood inside the custom wood frame, and secure the hood to the front and rear stud support (Refer to Figure 2) by using the front and rear mounting holes (Screws not included).
19. For a more secure installation, use the mounting holes located on the side of the hood.
20. Make sure hood is secure before releasing.
21. Re-install the light support panel. (Do not over tighten screws.)

⚠ CAUTION: MAKE SURE HOOD IS SECURE BEFORE RELEASING

Figure 10

Figure 11

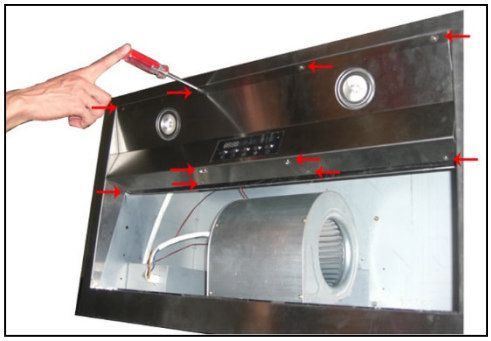

Hood Installation

22. Install the oil tunnel into recess support near rear of hood. Refer to Figure 12.
23. Install baffle filters. Angle baffle filter toward back of hood ①. Push baffle filter up until almost level ②. Slide forward into recess behind the front of hood ③. Lower baffle filter ④. Slide back until it fits into resting position ⑤. Refer to Figure 13.

Figure 12

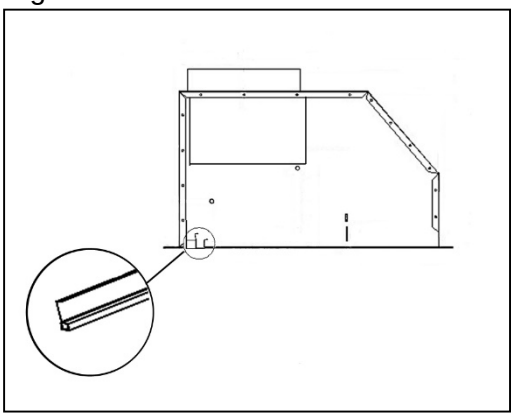

Figure 13

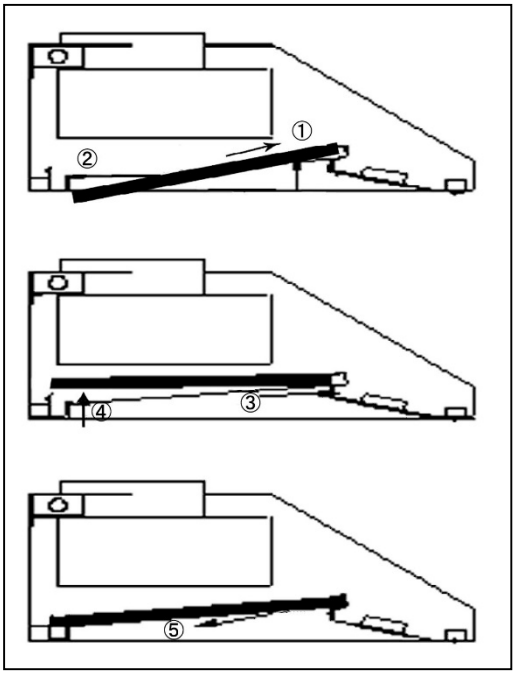

OPERATING INSTRUCTIONS

This KOBE hood is equipped with five electronic push buttons with LED display, a wireless remote control, a double horizontal squirrel cage blower with stainless steel baffle filters and two LED lights.

The five control buttons are Power Control (On/Off & 3-Minute Delay Shut-Off), Speed Control (High, Medium, Low & QuietMode™), ECO Control, Timer Control and Light Control. Refer to Figure 14.

Figure 14

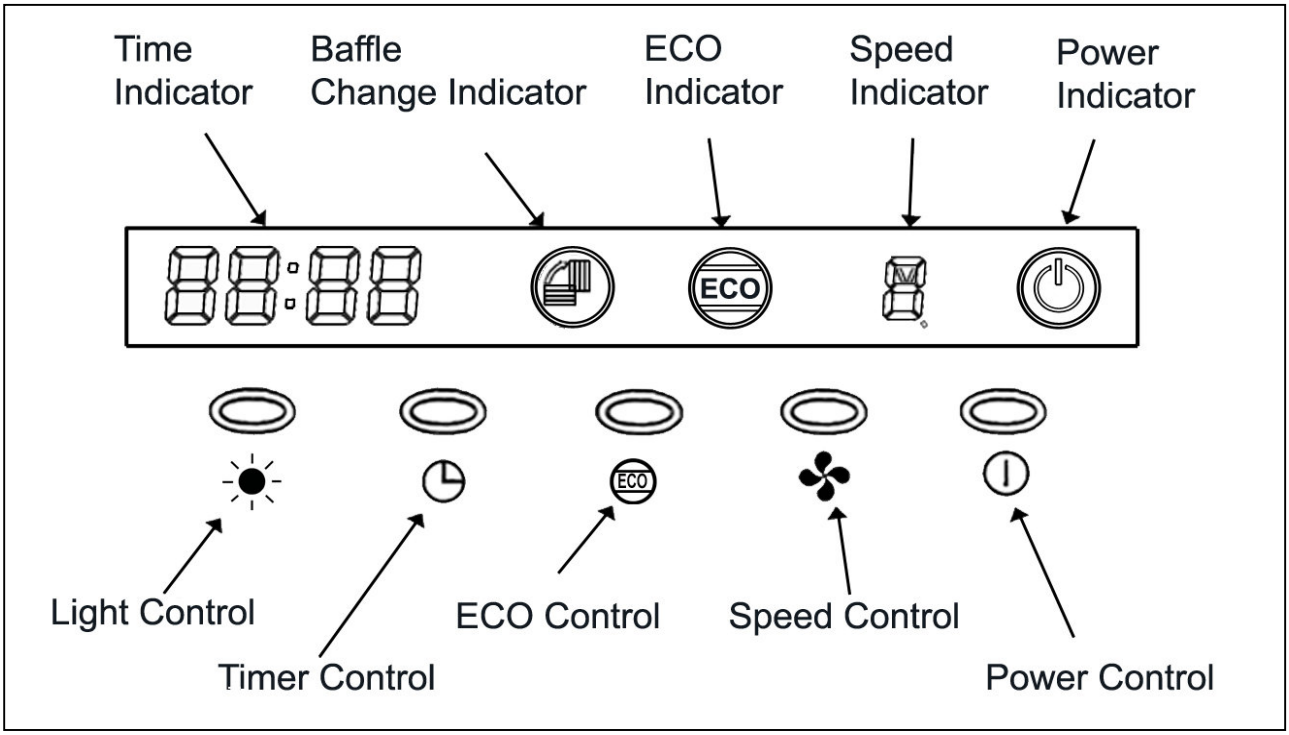

Note: For best results, turn the range hood to QuietMode™ prior to any preparation or cooking. Adjust speed as needed.

Power Control

Press Power Control to turn On/Off the range hood. Hood will power on at Low speed.
Output Display:

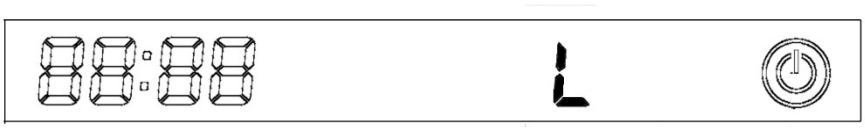

3-Minute Delay Shut-Off Control

Delay Shut-Off Control powers down the range hood after 3 minutes. Press the Power Control to activate Delay-Shut off. The Timer Indicator will automatically begin to count down from the default 3 minutes. When the time is up, the unit will completely power off.

To bypass the 3-Minute Delay Shut-Off, press the Power Control again to completely power down the unit.

Speed Control

(Each press of Speed Control will cycle the fan through Low, Medium, High and QuietMode™.)

Output Display will indicate:

Q = QuietMode™ Speed

L = Low Speed

M = Medium Speed

H = High Speed

ECO Control

The ECO function is set to turn on the range hood on QuietMode™ setting for 10 minutes every hour to remove excess moisture, microscopic particles and odors for better kitchen air quality.

ECO is independent from the power function.

To activate ECO when the unit is powered off, press the ECO Control. The ECO icon will be displayed to show that it is active. To deactivate it, press the ECO Control again. The icon will turn off, indicating it has been deactivated.

To activate ECO when the unit is powered on, press the ECO Control. The ECO icon will be displayed to show that it has been activated. **In order for ECO to take effect, the unit must be turned off.** If the fan is running, power it off by pressing the Power Control. The unit will automatically shut down in 3 minutes. To power down immediately, Press the Power Control again to power down the unit. Once the unit is powered off, the ECO icon will remain displayed, indicating that it is active. To deactivate it, press the ECO Control again. The icon will turn off, indicating it has been deactivated.

NOTE: Must open door or windows to create sufficient make-up air when ECO is operating.
Output Display when ECO is active:

ECO

Light Control

(Lights are controlled independently from Power Control. Turning the power off will not turn the lights off.)

Press Light Control to turn lights ON. Press Light Control again to DIM the lights. Press Light Control again to turn lights OFF.

Timer Control

The Timer Control allows users to set their range hood to automatically turn off. The timer ranges from 1 min. to 99 mins.

To activate the timer, the fan must be on (High, Medium, Low, or QuietMode™). As the fan is running, toggle the timer by pressing the Timer Control. The Timer Indicator will flash, indicating it is ready to be set. Press the Timer Control to set desired time, starting from 1 min. up to 99 mins. When finished setting time, the timer will begin to automatically count down.

Baffle Change Indicator

The display will indicate when baffle filter needs cleaning. Press and hold the Power Control for 5 seconds to reset the Baffle Change Indicator.

Remote Control

The six control buttons for the wireless remote control are Power Control (On/Off & 3 Minute Delay Shut-Off), Light Control, ECO Control, Timer Switch Control and Speed Controls (High, Medium, Low & QuietMode™).

NOTE: Requires 2 AAA Batteries. Batteries not included.

Power Control

Press Power Control to turn hood ON and OFF. Hood will power on at Low speed.

3-Minute Delay Shut-Off Control

Delay Shut-Off Control powers down the range hood after 3 minutes. Press the Power Control to activate Delay-Shut off. The Timer Indicator will automatically begin to count down from the default 3 minute setting. When the time is up, the unit will completely power down. To bypass the 3 minute Delay Shut-Off, press the Power Control again to completely power off the unit.

Light Control

(Lights are controlled independently from Power Control. Turning the power off will not turn the lights off.)

Press Light Control to turn lights ON. Press Light Control again to DIM the lights. Press Light Control again to turn OFF lights.

Speed Control

Press the Speed Control to activate the fan. The fan will start on Low speed. Each press of the Speed Control button will cycle through the various speeds.

Press ▼ to cycle from High, Medium, Low and QuietMode™

Press ▲ to cycle from Low, Medium, High and QuietMode™.

Press Power Control to activate 3-Minute Delay

Timer Control

While the fan is running, press the Timer Control to activate the Timer. The Time Indicator will flash, indicating it is ready to be set. Use the arrow keys to set the desired time.

Press of ▼ will decrease the time by 1 minute. Each press of ▲ will increase the time by 1 minute. When finished setting desired time, the timer will automatically begin to count down or press the Timer Control to immediately begin the countdown.

If the timer is not set (▼ OR ▲) within 6 seconds, the unit will automatically exit Timer Control Mode and ▼ ▲ arrow keys will return to speed function control.

ECO Control

To activate ECO when the unit is powered off, press the ECO Control. The ECO icon will be displayed to show that it is active. To deactivate it, press the ECO Control again. The icon will turn off, indicating it has been deactivated.

To activate ECO when the unit is powered on, press the ECO Control. The ECO icon will be displayed to show that it has been activated. **In order for ECO to take effect, the unit must be turned off.** If the fan is running, power it off by pressing the Power Control. Then press the Power Control again to power down the unit. Once the unit is powered off, the ECO icon will remain displayed to indicate that it is active. To deactivate it, press the ECO Control again. The icon will turn off, indicating it has been deactivated.

MAINTENANCE

For optimal performance, clean the range hood surface and baffles regularly.

To Clean Hood Surface

CAUTION: NEVER USE ABRASIVE CLEANERS, PADS, OR CLOTHS.

*** Regular care will help preserve its fine appearance.

1. Use only mild soap or detergent solutions. Dry surfaces using soft cloth.
2. If hood looks splotchy (stainless steel hood), use a stainless steel cleaner to clean the surface of the hood. Avoid getting cleaning solution onto or into the control panel. Follow directions of the stainless steel cleaner. **Caution: Do not leave on too long as this may cause damage to hood finish**. Use soft towel to wipe off the cleaning solution, gently rub off any stubborn spots. Use dry soft towel to dry the hood.
3. DO NOT allow deposits to accumulate or remain on the hood.
4. DO NOT use ordinary steel wool or steel brushes. Small bits of steel may adhere to the surface and cause rusting.
5. DO NOT allow salt solutions, disinfectants, bleaches, or cleaning compounds to remain in contact with stainless steel for extended periods. Many of these compounds contain chemicals, which may be harmful. Rinse with water after exposure and wipe dry with a clean lint free cloth.

To Clean Baffle Filter/Oil Tunnel

CAUTION: DRAIN OIL FROM BAFFLE FILTER, SPACERS & OIL TUNNEL REGULARLY TO PREVENT OVERFLOW.

1. Remove all the baffle filters, spacers and oil tunnel.
2. Using a sponge, wash with warm soapy water. Dry completely before returning into place.
   CAUTION: SHARP EDGES

   (Note: Baffle Filters are top rack dishwasher safe.)

SPECIFICATIONS

MODEL / SIZE	IN2630SQB-700-1 / 30”
COLOR	Commercial Stainless Steel
CONSUMPTION / AMPERE	290W / 2.5A
VOLTAGE	120V 60Hz
NUMBER OF BLOWERS	1
BLOWER TYPE: CENTRIFUGAL	Single Horizontal Squirrel Cage
EXHAUST	Top: 6” Round 3-1/4” x 10” Rectangular Rear: 6” Round 3-1/4” x 10” Rectangular
CONTROLS	5 Push-Button with LED Display - Variable Delay Shutoff
LIGHTS	LED Lights 3W x 2
HOOD DIMENSION (W X D X H)	28-3/8” x 18-1/8” x 12”

HOOD WEIGHT (lbs)		Net	Gross
	IN2630SQB-700-1	37.5	46.0

Blower Air Capacity (cfm)	QuietMode™	Low	Medium	High
	300	420	590	750
Sone*	1.0	2.0	5.0	6.0
dB	40.0	50.0	63.5	66.0

* One Sone is equivalent to 40 decibels.
**Specifications subject to change without notice.

MEASUREMENTS & DIAGRAMS

- All ( ) are in millimeter.
- All inch measurements are converted from millimeters. Inch measurements are estimated.

MODEL NO: IN2630SQB-700-1

Side View

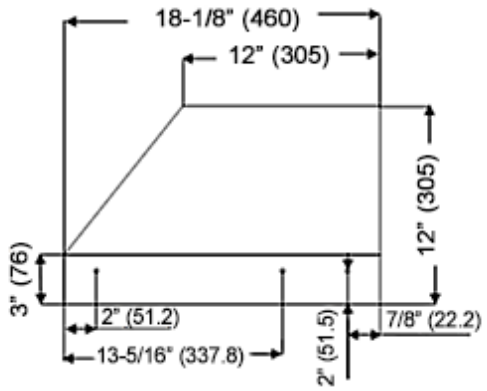

Bottom View

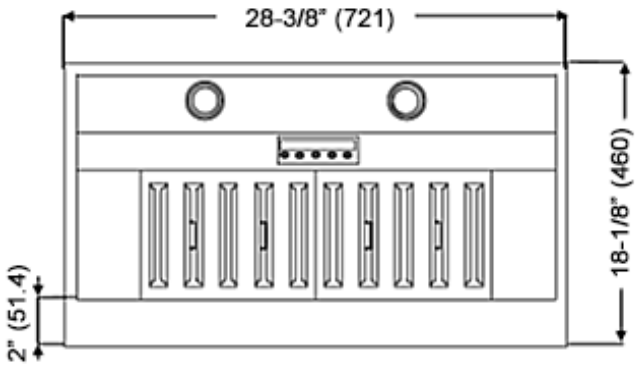

Back View

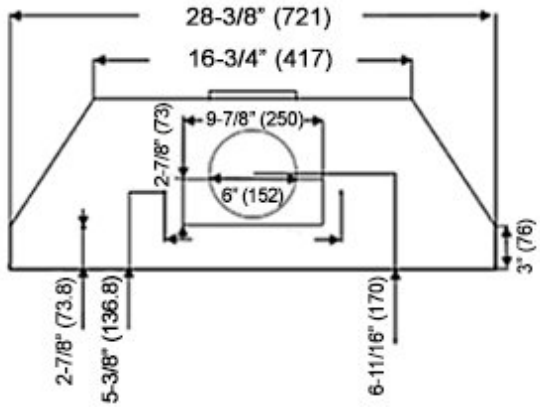

Top View

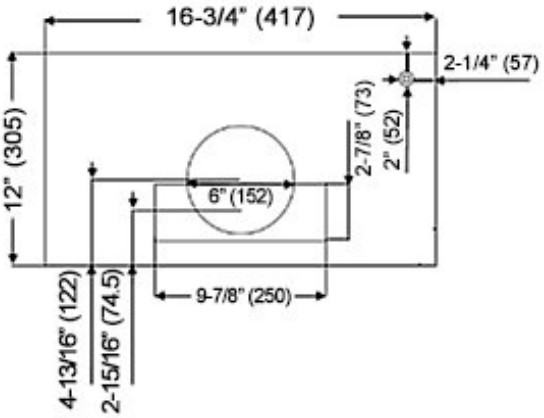

Front View

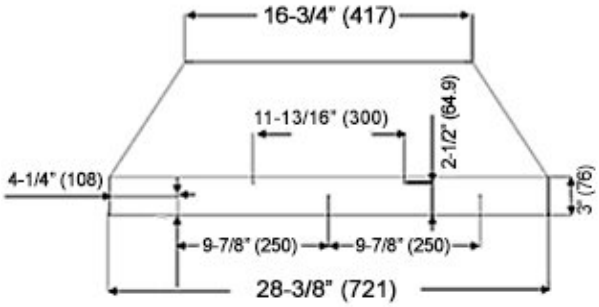

PART LIST

MODEL NO: IN2630SQB-700-1

NO.	DESCRIPTION	MODEL/SIZE	PART NO.
1	Rectangular Exhaust Plate		**L1-0241-0001B**
2	Rectangular Vent Cover		**L1-0241-0002A**
3	Round Exhaust Plate		**L1-0241-0001A**
4	Rectangular Exhaust Adapter		**L1-0241-0002B**
5	Electric Component Support		**L1-0201-2630**
6	Processor Board		**L1-0404-2636-B**
7	Capacitor x 1PCS		**L1-0401-0120-10**
8	Blower Bracket		**L1-0233-2630**
9	Oil Tunnel	IN2630SQB-700	**B101-2630-14A**
10	Blower System		**L1-0302-0120-802RE**
11	Bottom Casing (Attached to the hood)		**B101-2630-09**
12	Baffle Filter Support		**B101-2630-15B**
13	Stainless Steel Spacer		**B101-2630-14B**
14	Baffle Filter		**B101-2630-15**
15	Control Unit Support		**L1-0207-2630**
16	Control Unit		**L1-0404-2636-A**
17	Light Panel Support		**B101-2630-06**
18	LED Light (3W)		**L1-0403-0301**

MODEL No.: IN2630SQB-700-1

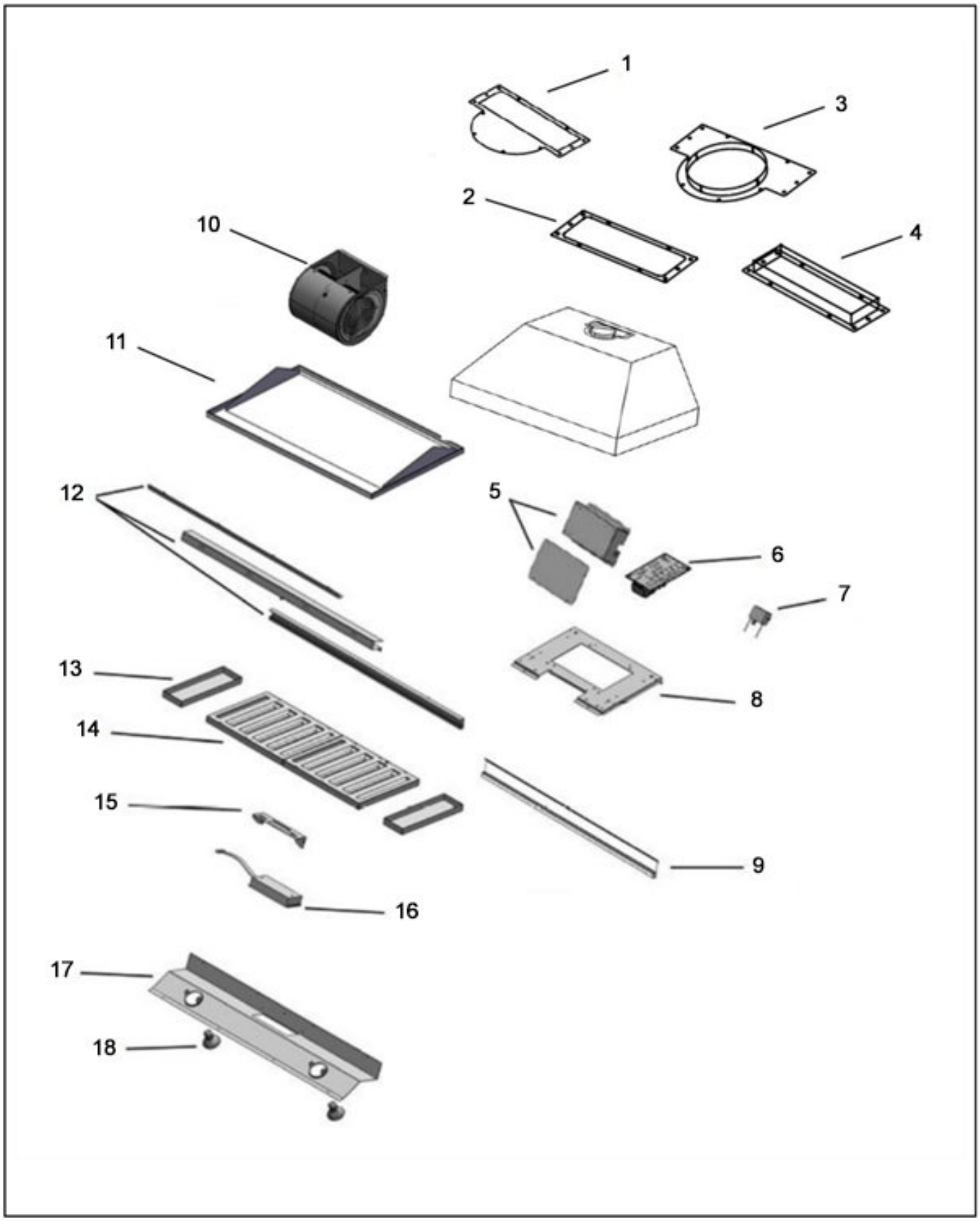

CIRCUIT DIAGRAM

MODEL NO.: IN2630SQB-700-1

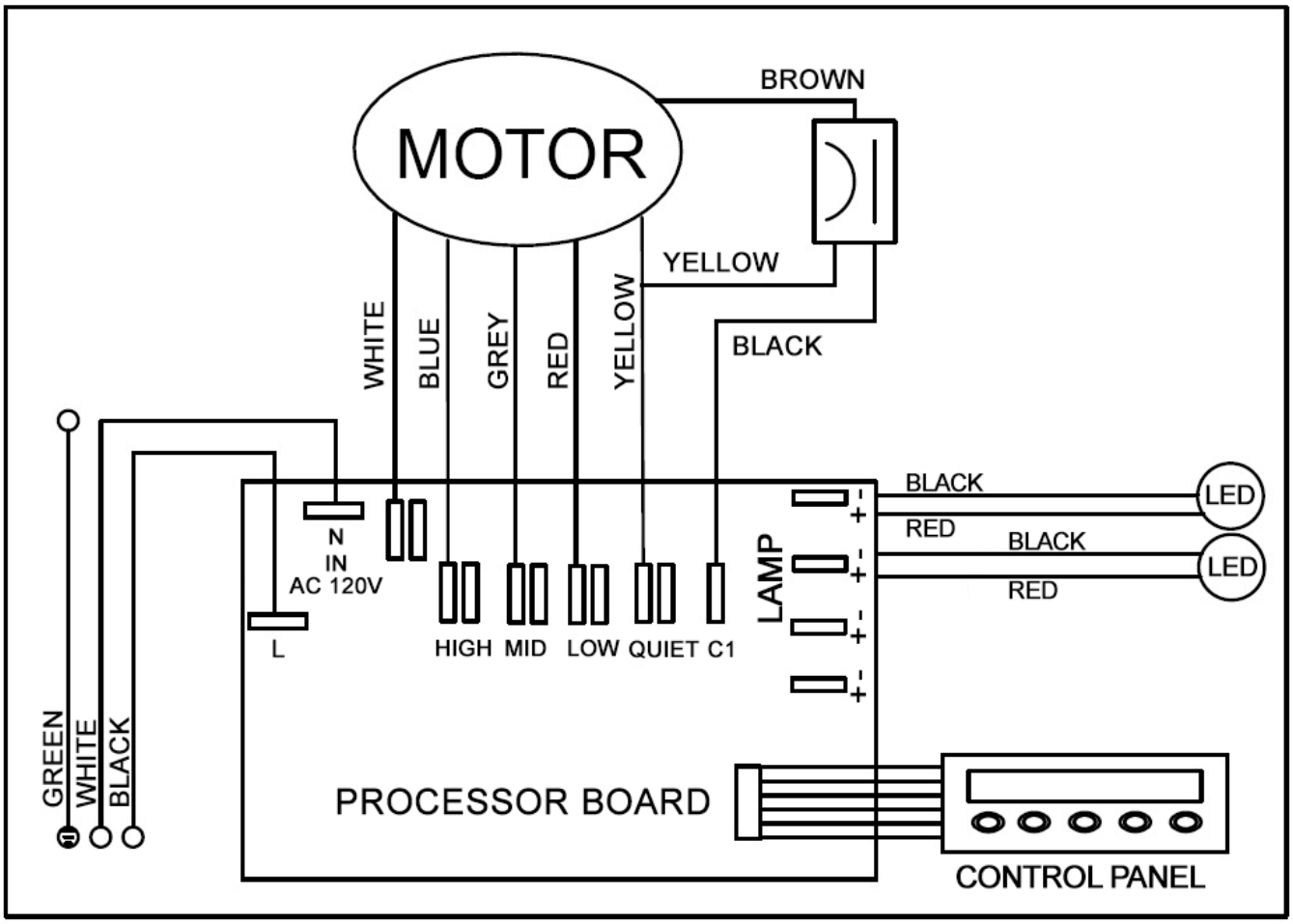

TROUBLE SHOOTING

Issue	Possible Cause	Solution
After Installation, motor and lights are not working.	The power is not on.	Make sure the circuit breaker and the unit's power is ON. Use a voltage meter to check the power supply.
	The wire connection is not secure.	Check and tighten wire connection.
	The control panel and processor board wiring are disconnected.	Check wire continuity from control panel to processor board.
	The control panel and processor board is defective.	Replace the control panel or processor board.
Lights are working, but motor(s) is not.	The motor(s) is defective.	Replace the motor.
	The capacitor(s) is defective.	Replace capacitor(s).
	The control panel or processor board is defective.	Replace the control panel or processing board.
Motor(s) is working, but light(s) is not.	The LED light(s) is defective.	Replace the LED light.
	The LED light transformer is defective.	Replace the LED light transformer.
	The control panel or processor board is defective.	Replace the control panel or processing board.
The range hood is vibrating.	The blower system is not secure.	Tighten the turbine impeller/squirrel cage and air chamber.
	The turbine impeller/squirrel cage is not balanced.	Replace the turbine impeller/squirrel cage.
	Hood is not secured in place.	Check the installation of hood, tighten the mounting bracket.
The range hood is not venting out correctly.	The range hood is installed outside of the manufacture recommended clearance.	Adjust the clearance between the range hoods and cook top to 27" to 30". For Island range hood, the clearance between the range hoods and cook top is 30" to 36".
	There is no make-up air inside the house.	Open the window to enhance the performance of the range hood by creating a sufficient make-up air.
	Obstacle blocking the pipe work.	Remove all obstacles from the duct work.
	The pipe size is smaller than the suggested pipe size.	Change the ducting according to the manufacture suggestion.
Cold air is coming into the home.	The pipe connection is not properly sealed.	Check the pipe installation.
	The damper is not properly installed or is missing from the installation.	Check the damper installation.
	The damper is not installed.	By installing the damper, it will help to eliminate air backflow.

WARRANTY CERTIFICATE

KOBE Range Hoods (referred to herein as “we” or “us”) warrants to the original purchaser (referred to herein as “you” or “your”) all products manufactured or supplied by us to be free from defect in workmanship and materials as follows:

TWO-YEAR LIMITED WARRANTY FOR PARTS AND LABOR ON KOBE PREMIUM/BRILLIA SERIES:
For two years from the date of your original invoice from a KOBE authorized dealer, we will, at our sole discretion, choose to repair or replace the product free of charge that failed due to manufacturing defects.

It is your sole responsibility to ensure the product is readily accessible for the service technician to perform repairs. **The service technician will not, under any circumstance, remove, alter or modify any fixture built around and/or connected to the product to gain access to perform repairs.**

During the two-year Limited Warranty period, additional charges may apply which include but are not limited to:

- Service technician travel charges if the requested service location is 30-miles out of KOBE’s authorized service area
- Parts shipping expenses
- Un-installation of defective product and Installation of replacement product

Warranty Exclusions:
This warranty does not cover, including but not limited to the following:

a. Improper installation.
b. Any repair, alteration, modification not authorized by KOBE.
c. Duct alteration, modification and connection.
d. Incorrect electric current, voltage or wiring.
e. Normal maintenance and service required for the product.
f. Consumable parts such as light bulbs and carbon filters.
g. Improper usage of the product that it is not intended for, such as commercial use, outdoor use and multi-family use.
h. Normal wear and tear.
i. Chips, scratches or dents by abuse or misuse of the product.
j. Damages caused by accident, fire, flood and other Acts of God.
k. Expenses incurred for service located outside of the designated service area.
l. Purchases from unauthorized dealers.
m. Removal fees of defective product and Installation fees associated with replacement product.

If we determine that the warranty exclusions listed above apply or if you fail to provide all necessary documentation for warranty service, you will be responsible for all expenses associated with the requested service, including parts, labor, shipping, travelling and any other expense related to the service request.

To qualify for warranty service, you must:

1. Have the **ORIGINAL** proof of purchase
2. Be the **ORIGINAL** purchaser of the product
3. Have the model number
4. Have the serial number
5. Have a description of the nature of any defect in the product or part

TO REQUEST WARRANTY SERVICE, PLEASE CONTACT THE KOBE RANGE HOODS SERVICE CENTER:

KOBE SERVICE CENTER
Toll Free: 1-855-800-KOBE (5623)
E-mail: kobe@adcoservice.com

For service in Canada and to report a problem, please contact:
Phone: 1-626-775-8880
Email: customer.service@koberangehoods.com

WARRANTY INFORMATION FORM

Fill in the blanks and keep this paper with the **original invoice** in a safe place for future service purpose.

1. Date of purchase : _____
2. Model No. : _____
3. Serial No. : _____

For warranty service or spare parts purchase contact:
KOBE Service Center (USA ONLY)
Toll Free: 1-855-800-KOBE (5623)
Email: kobe@adcoservice.com

For service in Canada and to report a problem, please contact:
Phone: 1-626-775-8880
Email: customer.service@koberangehoods.com

Your notes:

KOBE Range Hoods
11775 Clark Street
Arcadia, CA 91006 USA

www.koberangehoods.com

This KOBE hood is made for use in the USA and CANADA only. We do not recommend using this hood overseas as the power supply may not be compatible and may violate the electrical code of that country. **Using a KOBE hood overseas is at your own risk and will void your warranty.**

Cette hotte KOBE est fabriquée pour usage aux États-Unis et au Canada seulement. Il n'est pas recommandé d'utiliser cette hotte à l'étranger puisque l'alimentation électrique pourrait ne pas être compatible et enfreindre le code de l'électricité de ce pays. **L'usage de la hotte KOBE à l'étranger est à votre propre risque et la garantie sera annulée.**

Esta campana de extracción KOBE ha sido fabricada para ser utilizada únicamente en EE.UU. y CANADÁ. No recomendamos la utilización de esta campana en el extranjero debido a que la fuente de energía podría no ser compatible y podría violar el código eléctrico de dicho país. **Utilizar una campana KOBE en el extranjero será a su propio riesgo y anulará la garantía.**

Ver 160101

Information subject to change without notice.